Bally
REFRIGERATED BOXES INC.
135 LITTLE NINE DRIVE
MOREHEAD CITY, NC 28557
(800) 242-2559
FAX: (252) 240-0384

INSTRUCTION MANUAL

INSTRUCTION MANUAL: Replacing Cylinder Lock for D-100 Handle Assy
NUMBER: PI-013-01
DATE: 08/22/01

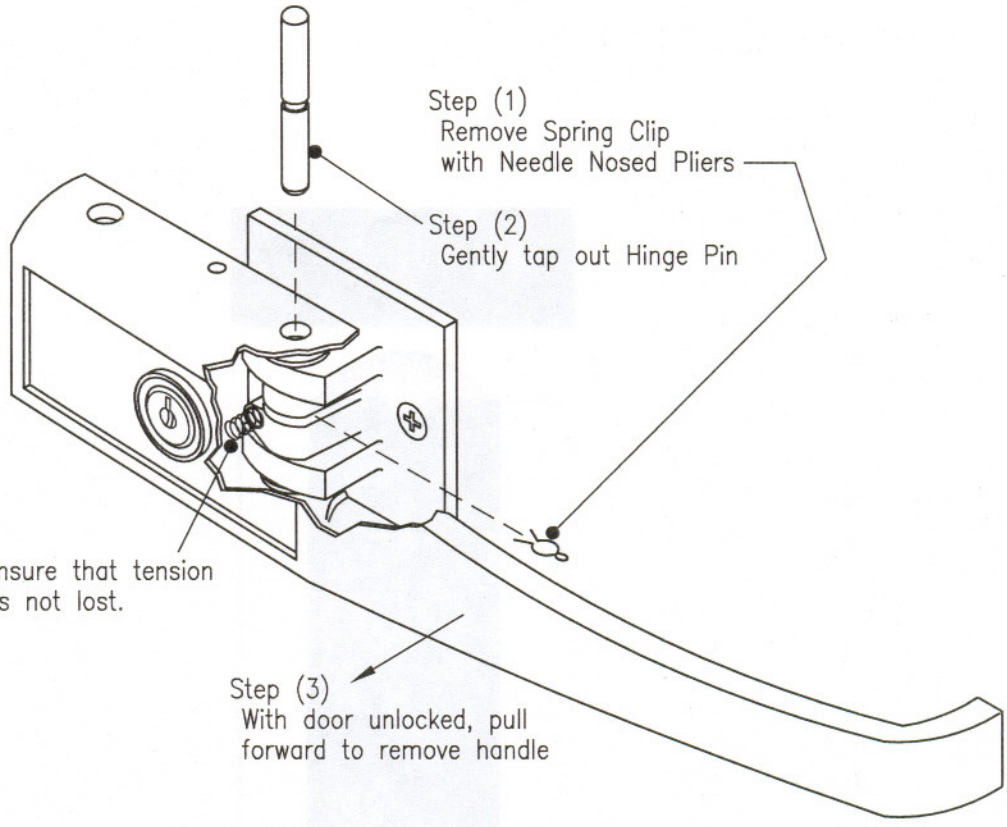

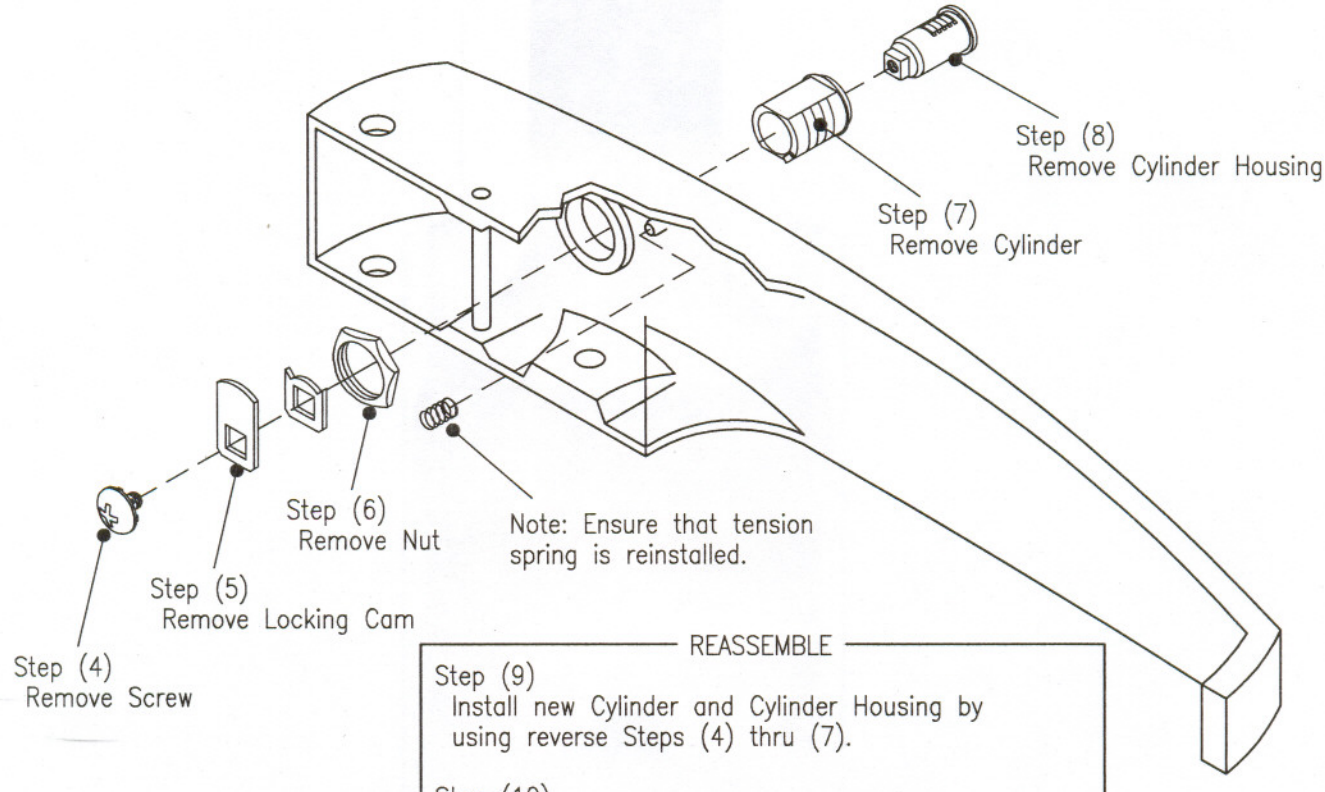

REASSEMBLE

Step (9)
Install new Cylinder and Cylinder Housing by using reverse Steps (4) thru (7).

Step (10)
Reinstall Handle by using reverse Steps (1) thru (3).